DWG NO.	SH	REV
PC75-20	1	A

REVISIONS

ZONE	REV	DESCRIPTION	DATE	APP
	A	CLARIFIED TEMP RANGE FORMAT	10/16/20	JW

SPECIFICATIONS

COIL RESISTANCE: 1200 OHMS ± 10%P
INDUCTANCE: 450 mH TYPICAL

IR LEAKAGE: 100 MOHMS @ 100 VDC MIN.

OUTPUT VOLTAGE: 100Vp-p @ 1000 I.P.S.
TEST CONDITIONS: 20 DP GEAR
100K OHM LOAD
.005" AIRGAP

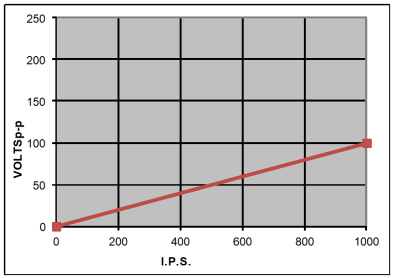

HAZARDOUS LOCATION: ATEX and IECEx CERTIFIED
II 2 G
Ⓔx d IIC T6 to T4
ATEX CERT: LCIE 11 ATEX 3029 X
IECEx CERT: IECEx LCI11.0012 X

TEMPERATURE CLASS	TEMPERATURE RANGE
T4	−40°C ≤ Ta ≤ +100°C
T5	−40°C ≤ Ta ≤ +85°C
T6	−40°C ≤ Ta ≤ +70°C

INSTALLATION INFORMATION PER MSI DRAWING ST-A-1810
NOTE: THE PICKUP MUST BE CONNECTED TO AN Ex d CERTIFIED
ENCLOSURE SYSTEM TO BE COMPLIANT TO ATEX AND IECEx STANDARDS.

PHYSICAL FEATURES:
ENCAPSULATION: EPOXY POTTED
CABLE: PVC JACKETED CABLE, 2 CONDUCTOR 24AWG WITH BRAIDED SHIELD.

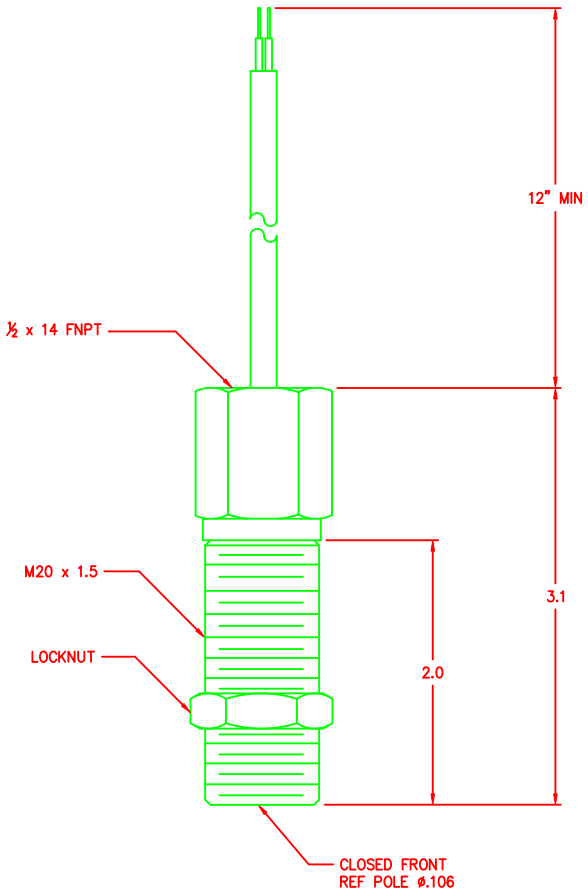

NEXT ASSY	USED ON
APPLICATION	

MATERIAL: 300 SERIES STAINLESS STEEL

FINISH:

CONFIDENTIAL PROPERTY OF MOTION SENSORS, INC. (MSI) NOT TO BE DISCLOSED TO OTHERS, REPRODUCED, OR USED FOR ANY OTHER PURPOSE, EXCEPT AS AUTHORIZED IN WRITING BY MSI. MUST BE RETURNED ON DEMAND.

APPROVALS		DATE
DRAWN	N. MEADOWS	09/09/11
CHECK	M. BERGMAN	09/09/11
ISSUED	JDEFEO	09/09/11

UNLESS OTHERWISE SPECIFIED DIMENSIONS ARE IN INCHES. TOLERANCES OTHER THAN THE SIZE OF RAW MATERIAL SHALL BE HELD AS FOLLOWS:
2 PLACE DECIMAL ± .01
3 PLACE DECIMAL ± .005
FRACTIONAL ± 1/64
ANGULAR ± 1/2°

MOTION SENSORS, INC.
ELIZABETH CITY, NC 27909

TITLE
OUTLINE DRAWING
PC75-20
Ex d CERTIFIED

SIZE	CAGE CODE	DWG NO	REV
C	OY2U4	PC75-20	A

SCALE NONE SHEET 1 OF 1